

Cover picture:
façade of Saint Agostino Church.

A STRAIGHTFORWARD INTEGRATED APPROACH FOR THE PRELIMINARY STATIC ASSESSMENT OF HISTORIC MASONRY CONSTRUCTIONS: the Saint Agostino Church in Anagni

Concetta Cusano*
Università degli Studi della Campania "Luigi Vanvitelli", Aversa, Italy, concetta.cusano84@gmail.com *Corresponding author

Paola Sorrentino
University of Naples Federico II, Italy, paola.sorrentino@unina.it

Viviana Lionti
Università di Pisa, Italy, v.lionti@studenti.unipi.it

Giacomo Destro Bisol
Sapienza Univ. of Rome, Italy, giacomo.destrobisol@uniroma1.it

Fabiàn Bernal Orozco Barrera
National Autonomus University of Mexico, CDMX, Mexico, fabian.orozco@fa.unam.mx

Antonino Iannuzzo
ETH Zurich, Switzerland, iannuzzo@arch.ethz.ch

ABSTRACT

Restoration of historic monuments is a complex and holistic process. It must consider the most relevant artistic, architectural, spatial, urban, geographical and climatic, colour and material, historical and traditional connotations of buildings. Therefore, different expertise must be joined to preserve architectural heritage. The present paper proposes the

analysis of Sant'Agostino church, a Roman Catholic church located in Anagni, Province of Frosinone, region of Lazio, Italy. It was entirely developed during the Summer School on Historic Masonry Construction (SSHMC) held in Anagni in September 2021 by one group of students. It provides a quick overview of what would be an ideal assessment strategy that combines together historic analysis, visual inspection, geometric processing through e.g. laser scanner, old assessment strategies and new computational approaches. Particularly, the structural assessment is performed using the Thrust Line Analysis (TLA), the Thrust Network Analysis (TNA) and Piecewise Rigid Displacement (PRD). It mainly looks at the stability of the dome, which is the most relevant element of the church as its hemispherical shape is intersected by four barrel vaults. The stability of the church is carried out by focusing on the internal stress state and explaining the relevant crack pattern present on the dome. Finally, an Appendix reporting a linear and nonlinear kinematic analysis of the facade shows that the only structural weakness of the building is the gable, which was restored in 2019.

SOMMARIO

UN APPROCCIO INTEGRATO PER LA VALUTAZIONE STATICA PRELIMINARE DI COSTRUZIONI STORICHE IN MURATURA: la chiesa di Sant'Agostino ad Anagni

Il restauro dei monumenti storici è un processo complesso e olistico. Deve considerare le connotazioni artistiche, architettoniche, spaziali, urbanistiche, geografiche e climatiche, cromatiche e materiali, storiche e tradizionali più rilevanti degli edifici. Pertanto, diverse competenze devono essere unite per preservare il patrimonio architettonico. Il presente lavoro propone l'analisi della chiesa di Sant'Agostino, una chiesa cattolica romana situata ad Anagni, provincia di Frosinone, regione Lazio, Italia. È stato interamente sviluppato durante la Summer School on Historic Masonry Construction (SSHMC) tenuta ad Anagni nel settembre 2021 da un gruppo di studenti. Esso fornisce una rapida panoramica di quella che sarebbe una strategia di valutazione ideale che combina insieme analisi storica, ispezione visiva, elaborazione geometrica attraverso, ad esempio, il laser scanner, vecchie strategie di valutazione e nuovi approcci computazionali. In particolare, la valutazione strutturale viene eseguita usando la Thrust Line Analysis (TLA), la Thrust Network Analysis (TNA) e il Piecewise Rigid Displacement (PRD). Si esamina principalmente la stabilità della cupola, che è l'elemento più rilevante della chiesa in quanto la sua forma emisferica è intersecata da quattro volte a botte. La stabilità della chiesa viene effettuata concentrandosi sullo stato di stress interno e spiegando il relativo modello di frattura presente sulla cupola. Infine, un'appendice che riporta un'analisi cinematica lineare e non lineare della facciata mostra che l'unica debolezza strutturale dell'edificio è il timpano, che è stato restaurato nel 2019.

KEYWORDS|PAROLE CHIAVE

Historic masonry construction, masonry domes, Thrust Line Analysis, Thrust Network Analysis, Piecewise Rigid Displacement method

Costruzioni storiche in muratura, cupole in muratura, Thrust Line Analysis, Thrust Network Analysis, metodo Piecewise Rigid Displacement.

The restoration of historic monuments involves discussions of technical issues about the values and meanings found in buildings and the correct way to intervene. The practice of approaching them must consider the most relevant artistic, architectural, spatial, urban, geographical and climatic, colour and material, historical and traditional connotations of buildings. Therefore, restoration is a complex and holistic process where different expertise must be joined to preserve the high-value architectural heritage [1].

The present paper proposes a preliminary assessment analysis of the Sant'Agostino church. One group of students developed it entirely during the Summer School on Historic Masonry Construction (SSHMC) held in Anagni in September 2021. The summer school lasted two weeks, and for this reason, the proposed report represents only a preliminary evaluation. It mostly looks at the structural assessment and does not combine all the technical features required for high-level restoration work as mentioned above. Nevertheless, the structural analysis founds upon a combination of visual inspections, laser scanner techniques, photogrammetry, and the use and combination of old structural techniques with new computational tools. And all these steps are linked together in a computational pipeline, even though primitive. This pipeline will enable the user to perform a wide range of possible analyses combining many different solutions most accurately without neglecting anything relevant. Moreover, for educational purposes, it allows students to start applying the theories they were learning in real case studies, getting familiar with new methodologies, testing different assumptions, and implementing the overall process in compliance with the current standard codes.

From a structural perspective, assessing and strengthening old monuments, particularly high-value architectural ones, is challenging as they differ case by case [2]. Additionally, in many cases, they are affected by relevant crack patterns, making the assessment even more complex. Indeed, it would require a different structural analysis strategy: it is not sufficient only to check if the current structure in its undeformed state is sufficiently stable to be considered safe. It needs a preliminary step to link crack patterns with their causes. Once an accurate assumption has been found, the 'standard' structural assessment can start, but it should refer to the deformed configuration as the starting point.

The complexity increases a lot when noting that standard commercial software, designed for high-accurate analyses on concrete, steel or wooden structures, are adopted also to assess old historical constructions. Their naive use can lead to catastrophic evaluations. Indeed, they are commonly designed to deal with bilateral materials, in many cases assuming a homogeneous response, and only sophisticated applications consider anisotropic constitutive relations [3], [4]. However, each of these assumptions might leads to counterproductive results. For example, a bilateral response, even with a small tensile strength, does not allow to capture the stability when crack patterns are present. That is, common mechanisms cannot be taken into account. Therefore, the assessment of cracked configuration is not possible. More complex and sophisticated software (e.g. using discrete elements) can provide more accurate analysis, but they require a very accurate mechanical characterisation. And in many cases, this material characterisation is not possible, as mechanical parameters or boundary conditions are unknown or unknowable [5]. However, when known, the results they offer are strongly dependent on these parameters, and the computational burden is very high, making them reliable only for a few straightforward analyses

and not as basic tools for the whole structural analysis process. Therefore, adapting standard commercial software for masonry analyses raises some doubts and would require the profound expertise of the user in the best scenario. This is widely demonstrated by the recent, increasing scientific attention paid to developing new computational strategies, in most cases using old limit analysis techniques.

Therefore, the main aim of the SSHMC is to introduce students and practitioners to a new, non-standard assessment strategy. More precisely, to make them well-aware that even old techniques, when computationally implemented, can still provide a proper and modern methodology to evaluate the stability of monumental constructions.

This paper proposes the analysis of Sant'Agostino church, a Roman Catholic church located in Anagni, Province of Frosinone, region of Lazio, Italy (figure 1).

On November 3rd 2018, firefighters detected an infiltration from the dome, and the church was closed permanently for doubts about its structural stability. The assessment is performed using the Thrust Line Analysis (TLA), the Thrust Network Analysis (TNA) and Piecewise Rigid Displacement (PRD). It mainly looks at the stability of the dome, which is the most relevant element of the church as its hemispherical shape is intersected by four barrel vaults. The stability of the church is carried out by focusing on the internal stress state and explaining the relevant crack pattern present on the dome. Finally, an Appendix reporting a linear and nonlinear kinematic analysis of the facade shows that the only structural weakness of the building is the gable, which was restored in 2019.

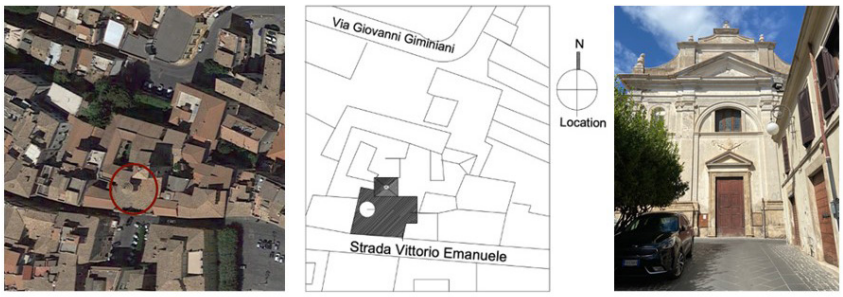

1. Planimetry **(a-b)** and facade of the church **(c)**.

HISTORICAL CONTEXT

The Augustinian Fathers built the Roman Catholic church of Sant'Agostino between 1479 and 1575 in the old Santa Caterina church area. In 1556, Spanish troops sacked the town and occupied the church, provoking considerable damages to the structure. A year later, the city was returned to the papacy in ruined condition since the Spanish had demolished many buildings and a large portion of the city walls.

After that, restoration works started with the reconstruction of the city walls. Although Gabrio Serbelloni, cousin of Pius IV, was nominally in charge of the walls reconstruction, some documents attribute it to Giovanni Antonio Dosi (known as Dosio, 1533-1611) in 1564-66 [6].

Referring to Sant'Agostino church, the village's main church, there is no official documentation about its construction. Its current design is attributed to Dosio, as the plan and the structural composition reflect his architectural style, and, in the same period, he also worked to rebuild the walls of Anagni under the supervision of Torquato Conti [6].

In the 18th century, the church was rebuilt entirely, and in 1790-95 the structure was renovated. With the suppression of the religious order in 1873, the church was partly occupied by the police station. The church served religious functions until a few years ago. On November 3rd 2018, firefighters detected an infiltration from the dome (figure 2), and it was closed permanently.



(a) (b) (c)

2. Infiltrations affecting the dome of Sant'Agostino church.

The following year on January 14th, the façade was cordoned off, and later, on May 15th, the restoration work officially started. It ended in August 2019. Particularly, the works on the facade consisted of dismantling the metal cross; reconstructing the crumbling cornices, and consolidating the unsafe parts; the creation of the new copper covers; the execution of the structural intervention on the facade, which involved the construction of masonry pillars and iron profiles, and "to reconnect" it to the underlying masonry to reduce the risk of overturning and collapse (figure 3). The work was carried out by the Committee of the Minister of the Interior, the Minister of Heritage and Culture, Activities and Tourism of Lazio and the Superintendency of Archeology, Fine Arts and Landscape. Besides this structural intervention involving only the facade, the church is still closed as doubts about its structural stability.



(a) (b) (c)

3. Restoration works on the facade: position of the façade on the plan **(a)**, and two images showing the intervention **(b-c)**.

GEOMETRICAL SURVEY AND MATERIAL PROPERTIES

The present Section describes the geometrical and material surveys performed to lay a base for the structural analysis. Specifically, the first subsection summarises the visual inspection survey; the second one describes the geometry of the church, paying particular attention to the structural elements; and, the last one describes the material adopted and briefly introduces the construction features.

Visual inspection and measurements

To perform a detailed geometric survey of the structure, an accurate inspection of the entire church was carried out. The complexity of the building led us to acquire a detailed knowledge of its geometry. This was achieved by employing advanced instrumentations, such as a 3D laser scanner, and a direct survey methodology.

The direct methodology consisted of metric and visual inspections. It was required as a fundamental critical process to draw horizontal and vertical cross-sections needed to extrapolate metric information. Beyond a good physical accessibility to the architectural artefact, a direct survey is always needed as it allows the integration of spatial and visual information with the ones from advanced methodologies. Indeed, this survey provided subsequent thematisations for realising 3D geometric models through the church and dome configurative and geometric-spatial genesis definition (figure 4).

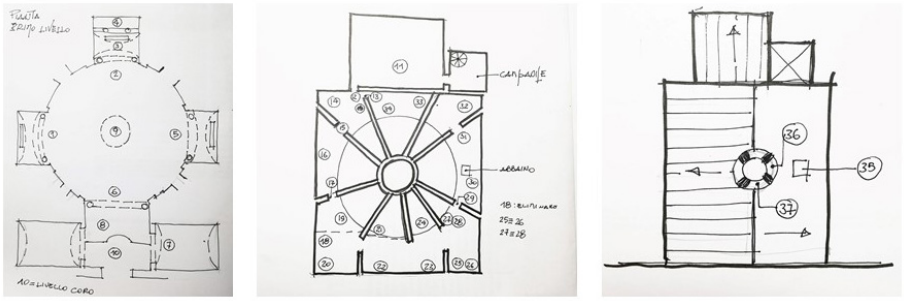

(a) (b) (c)

4. Sketches from the visual inspections. Pan of the church **(a)**, of the dome extrados including the supported partition walls **(b)** and of the roof **(c)**.

Once the 3D model of the church was obtained through the laser scanner technique, the orthoimages were extracted in Cad software, post-processing the corresponding cloud point. After that, cross-sections and plans were obtained using FARO Scene [7], as illustrated in figure 5. Scene is the software provided by Faro to manage, clean, register (join), visualise and obtain derivative products from laser scanners.



(a) (b) (c)

5. Laser Scanner survey. Orthoimages obtained with Faro Scene: plan of the church **(a)**, longitudinal **(b)** and transversal **(c)** cross-sections.

The data return took place in the form of planimetric and elevation representations, which allowed a graphic visualisation of the various altimetric levels of which the dome is composed. These results are summarised and described in the next Section.

Geometry

The church is of 15th-century architecture and shows a square plan (figure 6a). The square sides of the church's plan are prolonged in correspondence with the church entry to make room for the entrance. Two small chapels with altars are located on both sides of the entrance (figure 6c,d). They are covered by pavilion vaults decorated with frescoes. In the central space of the church, four circular arches, sustained by columns, are located in such a way to mark the entrance to the church on one side of the nave, the altar located on the opposite side of the entrance, and the openings of two small chapels at the ending of the transept (figure 6b).

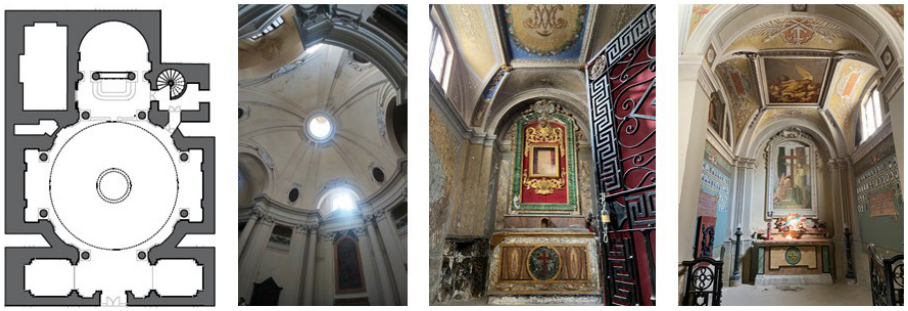

6. Plan of the church **(a)**, inner view of the dome **(b)** and view of the two small chapels next to the entrance **(c-d)**.

The four arches resting on columns define four small orthogonal spaces covered by barrel vaults, which directly intersect the dome, as shown in figure 7c. Curved walls having the same dome's curvature connect the four arches. The central space of the building is characterised by a circular space having a diameter of 15.02 meters covered by a dome resting on the four curved walls. The dome is surmounted by a lantern open on four sides by large windows. The light enters from the lantern in the space below the dome through a circular oculus whose internal radius is about 1.40 meters.

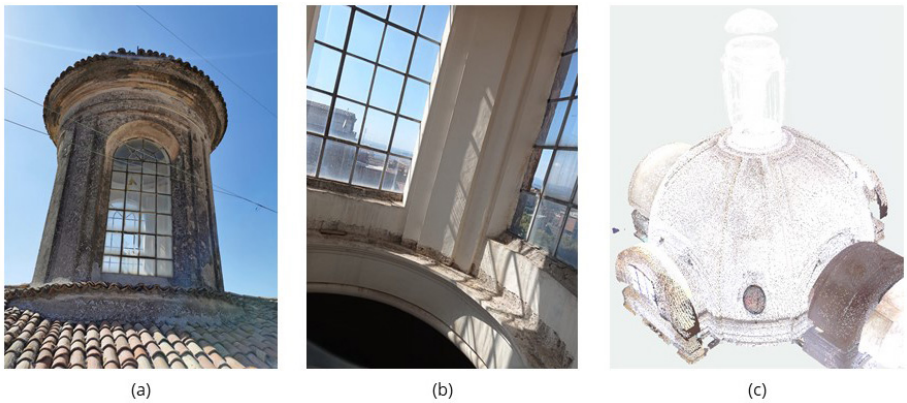

7. Lantern: external view **(a)** and inner view **(b)** of the lantern, and point cloud highlighting its size compared to the dome geometry **(c)**.

The nave ends with a circular apse covered by a semi-dome. The dome is not visible from the outside, as hidden by an inclined roof supported by the partition walls. Nine radial masonry walls surmount the dome, each with a depth of 60cm, as shown in figure 8b,c. Their projection onto the plan divides the dome into nine sectors (figure 8a).



8. Disposition of the partition walls on the dome extrados **(a)**, connection between the roof and the partition walls **(b)** and zoom in on the intersection between a partition wall and the dome extrados **(c)**.

Accurate geometry modelling is the first preliminary step for an overall comprehension of the structural behaviour. Moreover, it becomes even more critical when the stability assessment of the structure is based on classic Limit Analysis methods as they only require geometrical information and parameters describing any material failure are neglected. To this aim, figure 9 reports a 3D view of the main structural elements obtained with the survey that affect the structural response of the building: the gigantic lantern, the dome, the nine curved partition walls supporting the dome, the four orthogonal barrel vaults interesting the dome and the eight columns sustaining the arches placed on those intersections. However, the main peculiar aspect of the Sant'Agostino church is the intersection between the dome and the four orthogonal barrel vaults (figure 9b). This geometrical feature is unique, as domes were normally and directly built on supporting arches or on a tambour. A few similar cases can be found in the architectural panorama of the 15-16th centuries. For a similar subject, the reader is referred to *Santa Maria alla Sanità in Naples* [8], where lunettes for windows are carved from the surface of the inner dome. As shown in the next sections, it drastically affects the structural behaviour of the dome and, consequently, influences the mechanical response of the supporting structures.

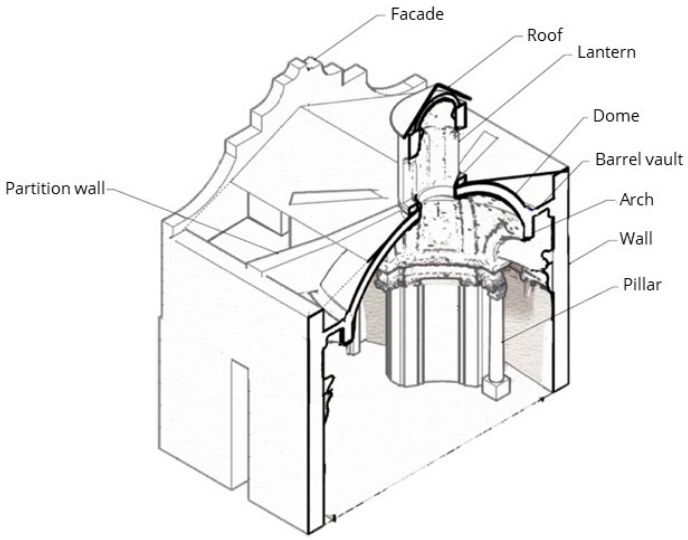

9. 3D view of the church geometry highlighting the main structural elements.

In figure 10, the longitudinal and transverse cross-sections summarising the structural elements are depicted. Figure 10a highlights the slenderness of the gable.

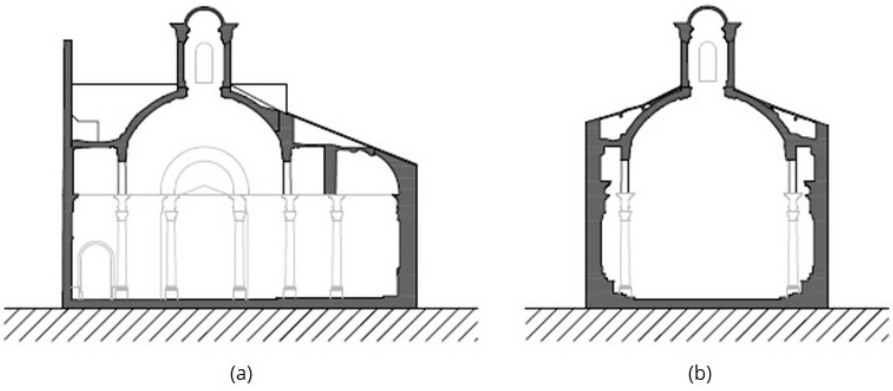

10. Longitudinal **(a)** and transverse cross-sections **(b)**.

A brief description of the geometrical construction is reported in what follows, referring to the dome plan (figure 11). The dome sets on a regular octagon, whose side leght L is 5.64 m. As highlighted in figure 11, the distance between two opposite and parallel sides of the octagon is obtained multiplying the side length L by $(1+\sqrt{2})$, which is exactly the silver ratio. Lastly, the internal radius of the lantern is obtained dividing the side length L by 4.

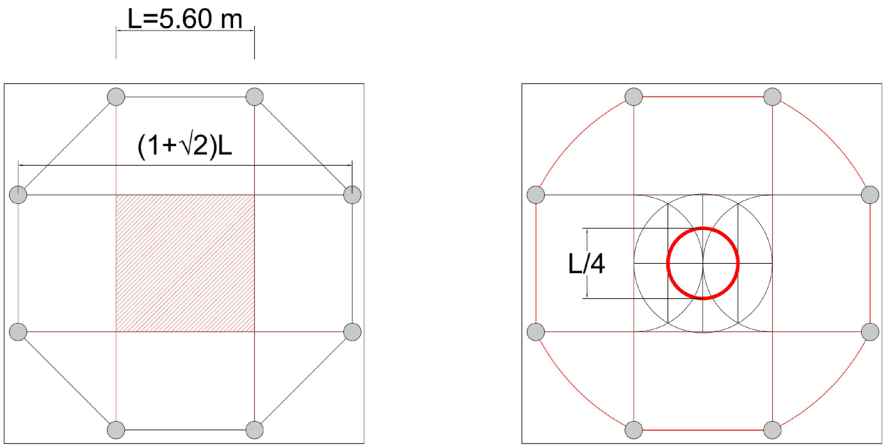

11. Plan of the dome and the drawing process of its geometry.

The dome cross-section shows a semi-spherical shape with an external diameter of 14.10m and a thickness of 0.55 m, constant along the cross-section (figure 12a). Figure 12b lists the relevant dimensional parameters of the dome and lantern.

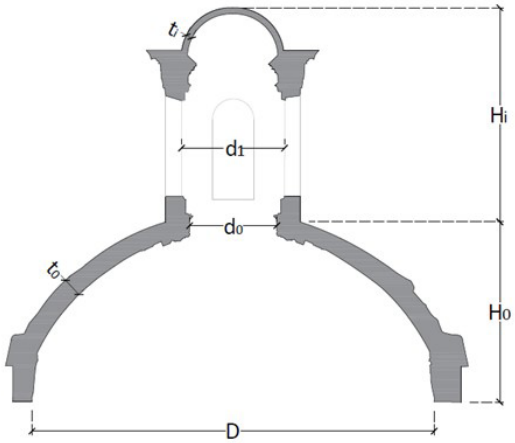

(a)

Geometry		
Symbol	**Parameter**	**Value**
	Dome	
H_0	Rise (m)	5.83
D	Diameter (m)	14.10
t_0	Thickness (m)	0.55
d_0	Oculus diameter (m)	2.80
	Lantern	
d_1	Diameter (m)	3.34
Hi	Height (m)	6.93
ti	Thickness (m)	0.20

(b)

12. Cross-section of the dome and lantern **(a)** showing the relevant geometrical parameters whose values are reported in **(b)**.

Material properties and constructive features

A visual inspection was conducted to assess the masonry typologies and construction features. The in situ observation of the dome extrados showed that the material used for the basement, the dome and the partition walls is limestone (density γ 1600 Kg/ m^3); also, the façade and the church's internal structure are mainly constituted of limestone. The difference is the unit shape and how the units were assembled. Figure 13a shows two different arrangements of the masonry blocks found in the building. It is worth noting that the partition walls are built with regular cut stones.



(a) (b)

13. Two different arrangements of the blocks found in the church **(a)** and details of the dome pattern **(b)**.

METHODOLOGY

The structural analysis provided in the present paper is based on the Heyman Limit Analysis theory [9]. As such, three basic assumptions are considered:

- no tensile strength;
- infinite compressive strength; and,
- sliding failure does not occur.

These three hypotheses provide a rigorous base to apply classic limit analysis to masonry structures through the standard theorems of Plasticity, which in the Heyman framework read:

- **Safe theorem**: "If a line of thrust can be found which is in equilibrium with the external loads and which lies wholly within the masonry, then the structure is safe".
- **Kinematic theorem***:* "Collapse will occur (or will have occurred previously) if a kinematically admissible collapse state can be found. A "kinematically admissible" collapse state is one characterised by the condition that in a virtual displacement of the mechanism, the work done by the external loads must be at least as large as that done by the internal forces".

For the assessment of the Sant'Agostino church, the stability of its central dome is critical. As noted by Heyman, masonry domes show a typical crack pattern defined by meridian slices. Indeed, these typical fractures are due to small outward movements of the supporting base (figure 14). And they represent the way adopted to accommodate the new boundary conditions.

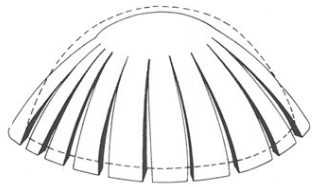

14. Typical crack pattern of masonry domes [9].

Because of this common crack pattern, a conservative way to look at the dome stability is to decompose it into many slices and perform a typical 2D thrust line analysis. Moreover, this procedure is conservative as common hope forces, present at the upper cap, cannot be considered. This technique was first adopted by Poleni [10] in the middle of the XVIII century to assess the San Peter Dome (figure 15).

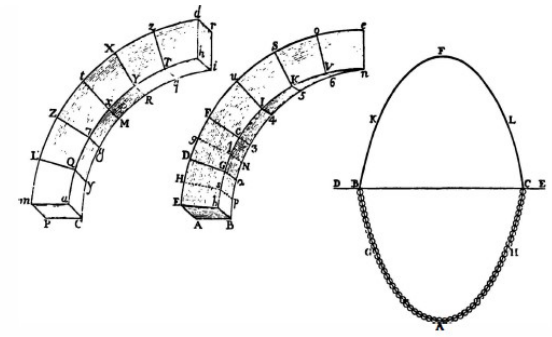

15. An image from Poleni (1748): the hanging chain model used to assess the meridian slices of San Peter's Dome.

In the present work, the structural analysis has been performed considering: Thrust Line Analysis (TLA) analysis, which turns out to be a graphic statics application of limit analysis's safe theorem; Thrust Network Analysis (TNA), an extension of the TL to 3D structures; and, the Piecewise Rigid Displacement (PRD) method, which is an energy-based, kinematic approach.

Thrust Line Analysis (TLA)

TLA is a graphical method to verify the stability of 2D structures, such as arches, or 3D structures, such as vaults discretised using the slicing technique. It originated at the end of the 17th century: Robert Hooke had the brilliant intuition to look at the arches' stability through inverted hanging chains, framing their analysis within the science of statics. The foremost step in the theory of masonry structures occurred in the second half of the last century, applying the recently developed limit analysis. It is worth pointing out that any complex shapes can be studied starting from the behaviour of the arch. In fact, a dome, however complex it may be, can always be traced back to a set of arches using the slicing technique. This ancient method visualises the dome as composed of meridian slices. Every two opposite dome slices form an arch resting on a shared, sometimes virtual if an oculus is present, keystone. Therefore, if the two opposite arches are stable, the dome is stable too. Several equilibrated thrust lines can be drawn depending. Each thrust line corresponds to a possible equilibrium configuration [11] An arch with sufficient thickness can show two limit conditions, called maximum thrust and minimum thrust states (figure 16). All thrust lines expressing an equilibrated solution show a horizontal thrust within this range.

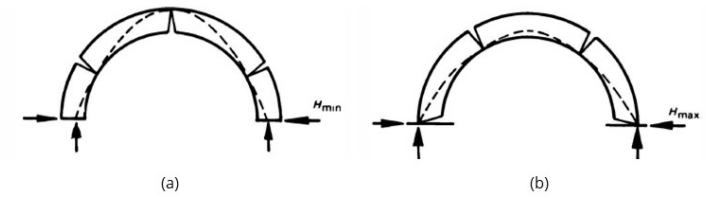

16. Minimum thrust (a) and maximum thrust (b) for an arch [11].

A real-time interactive procedure was developed in the Excel environment to explore the infinite equilibrated internal stress states. This routine requires only weights and geometric data as input and is developed to consider the geometry shown in figure 17, taking also the supporting walls into account. The weight of the lantern is considered as an additional vertical load. All TLA are performed on slices of the dome whose prototypical discretisation is reported in figure 17.

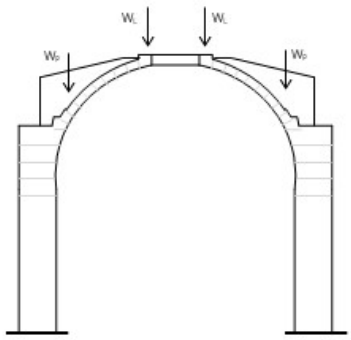

17. A typical discretisation of a slice of the dome. Note that the partition walls (whenever present) and the lantern are simulated with an additional imposed weight.

For all analyses, the geometric data required are: the dome's inner and outer radius; centroid coordinates of each voussoir; and, points of application of the forces. Starting from these geometrical parameters, a thrust line is automatically evaluated as a function of the pole of the funicular polygon [12].

Thrust Network Analysis (TNA)

Thrust Network Analysis (TNA) is a numerical strategy to compute equilibrated, compressive and admissible thrust network (TN) entirely contained within the structural geometry of the masonry. It represents a 3D application of the limit analysis's safe theorem as admissible thrust networks correspond to a lower-bound solution. It founds on two diagrams: the form diagrams representing the horizontal projection of the thrust network; and, the force diagram, which gives a 3D direct visualisation of the forces developed in the network. Specifically, the TN is the representation of a one-dimensional, singular, compressive stress field where the forces are concentrated on the TN's edges and the vault's self-weight is lumped to forces acting on the TN's nodes. For more information, the reader is referred to [13], [14].

Piecewise Rigid Displacement (PRD) method

The Piecewise Rigid Displacement (PRD) method founds upon the minima of both potential and complementary energy for rigid unilateral materials. The complementary energy provides contact forces among elements, while the total potential energy defines displacements compatible with the contact forces, in equilibrium with external loads and compatible with give boundary displacements. For more info, the reader is referred to [15], [16].

STRUCTURAL BEHAVIOR

The present section illustrates the results of a preliminary structural study of the church using the methodologies proposed in the previous section. The stability of the whole church is dominated by the dome as its structural response affects the main supporting elements. Its geometrical form, the uncommon connection with the four-barrel vaults, and the connection with and the action exerted by the partition radial walls make the structural response of this dome different from what might be expected. For this reason, this section looks at the structural analysis of the dome and different assumptions are made to explore a wide range of possible mechanical scenarios. Particularly, a parametric exploration of the internal stress states using TLA is first performed using the Excel routine [17]. Different structural hypotheses are explored and assessed to model the contribution to the stability of these structural elements. For each of them, the geometric safety factor is evaluated. After that, a TNA statics analysis is performed to assess the 3D stability of the church. Lastly, a PRD analysis is carried out to show the internal flow of forces in equilibrium with radial outward displacements and to assess the corresponding crack pattern.

TLA of the dome

The stability of the dome, the supporting structures and the partition walls are here investigated using the slicing technique. This method allows framing the 3D structural analysis as a 2D problem. Any interacting behaviour between adjacent slices is ignored. Therefore, the analysis is conservative as it neglects the well-known dome biaxial response, which is always present in its upper cap. In general, the orange slice subdivision can be arbitrary, meaning that the slicing angle can be any. However, the dome is symmetric but the disposition of the supported partition walls is not. Therefore, different slices have to be considered as reported in figure 18, which defines 12 different slices. Indeed, based on the loading conditions and geometric features, the 12 slices can be grouped into three different categories:

I. 8 slices of 29°, each one directly loaded by one partition wall, and whose prototype is represented by the A-A cross-section;
II. 2 slices of 30°, ending on the lateral nave arches and without any additional loads (B-B); and,
III. 2 slices of 34°, both ending on the central arches. One with a partition wall, while the opposite is unloaded (C-C).

In all cases, the contribution of the roof has been neglected while the weight of the lantern has been considered as an additional vertical load. Moreover, to evaluate the contribution of the partition walls to the stability, whenever possible two analyses are performed: one without considering their weight and one with. As discussed in the Methodology section, the minimum thrust represents a typical working condition for a dome. Therefore, all TLA analyses look at the minimum thrust. The analyses are performed referring to three cross-sections AA, BB, and CC as above identified.

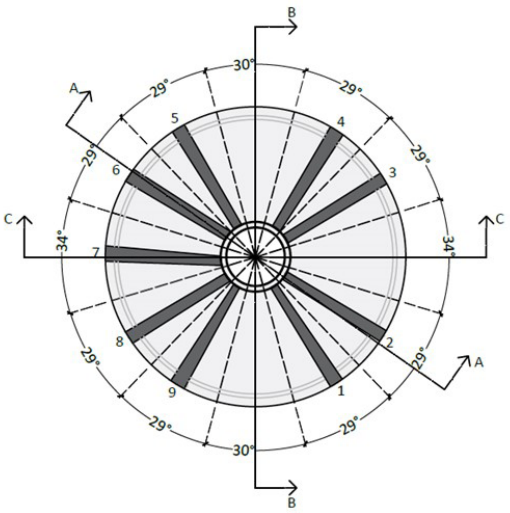

18. Slicing technique: orange slice subdivision.

Case i. The first analysis looks at the stability of the 29° slice. Each slice supports one partition wall as shown in figure 19. Neglecting the partition walls' weight, the TLA analysis provides a minimum thrust of 99.00 kN, which results in a geometric safety factor of c=2.64 at the base of the wall. The results are reported in figure 20a.

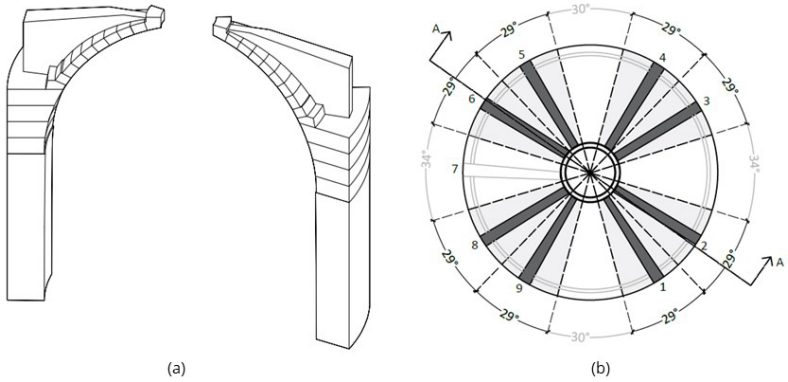

19. The case of a 29° slice: 3D view **(a)** and 2D plan highlighting the 8 equal slices.

With partition walls. The second hypothesis considers the contribution of the walls as additional weights. Still, the TLA analysis provides the same minimum thrust, resulting in a geometric safety factor of c=4.18 at the base of curved walls sustaining this slice. The results are reported in Figure 20b.

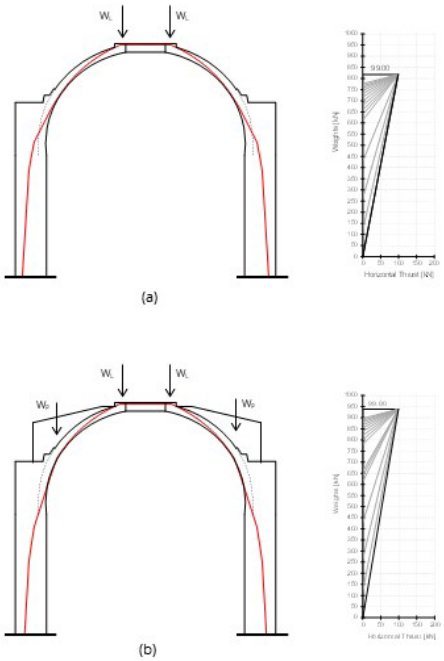

20.TLA analysis of the 29° slice: minimum thrust and funicular polygon without considering the weight of the partition wall **(a)** and with them **(b)**.

Case ii. The second analysis considered a lune of 30° (figure 21) which ends on the lateral nave arches and is not affected by any partition wall.

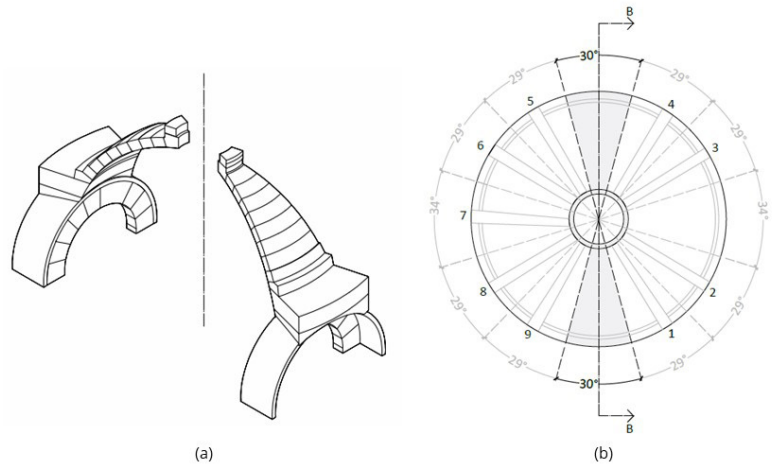

21. The case of a 30° slice: 3D view **(a)** and 2D plan highlighting the 2 equal slices.

In the present case, the lune is not affected by any partition wall. The lune ends on one of the four nave arches connected to the orthogonal barrel vault. Therefore, only one minimum thrust analysis is performed focusing on the dome cross-section. It offers a horizontal thrust of 96.50 kN (figure 22).

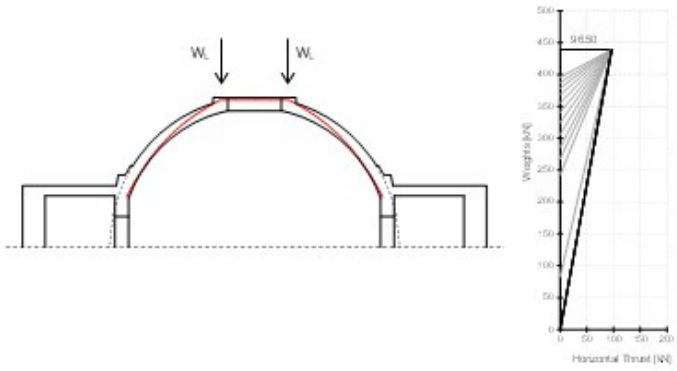

22. TLA analysis of the 30° slice: minimum thrust and funicular polygon.

This dome slice exerts its horizontal thrust on the lateral arch, which is loaded by transversal forces belonging to an inclined plane. The internal stress states of the arch can be represented by a thrust line lying on a non-vertical plane, as drawn in figure 23.

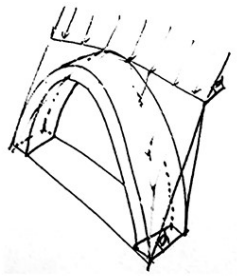

23. The contiguous nave arch is unsymmetrically loaded by the dome slice. Its internal thrust line belongs to a non-vertical plane. Draw by Prof. Huerta.

Case iii. The third analysis considered the lune of 34°. The two opposite slices show an unsymmetric loading condition: only one of them is affected by a partition wall. The two slices end on the remaining two orthogonal nave arches in both cases. And, as the reader may suppose, also in the present case, these two opposite arches are loaded on a non-vertical plane. Particularly, two hypotheses were checked considering that both the slices of 34° ending on the central arches. One is loaded by the wall above while the other is unloaded (figure 24).

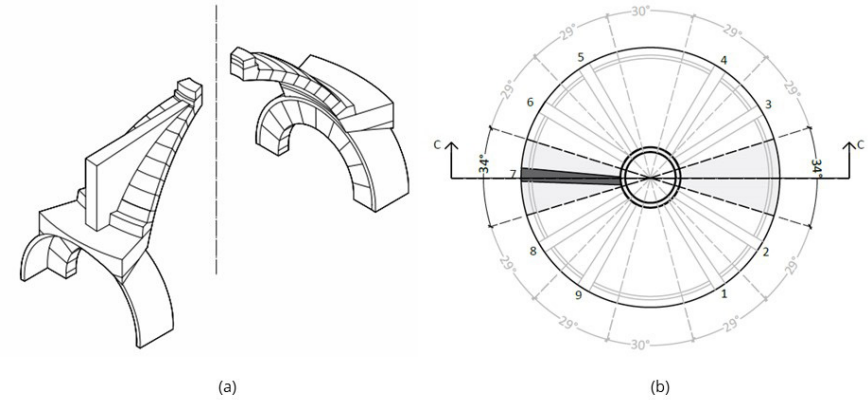

24. The case of a 34° slice: 3D view **(a)** and 2D plan highlighting the two equal slices.

In the present case, the two opposite slices have to be analysed at the same time. The minimum thrust condition found is dictated by the equilibrium of the left slice and is equal to 113.00 Kn. Figure 25 shows the results of the proposed TLA.

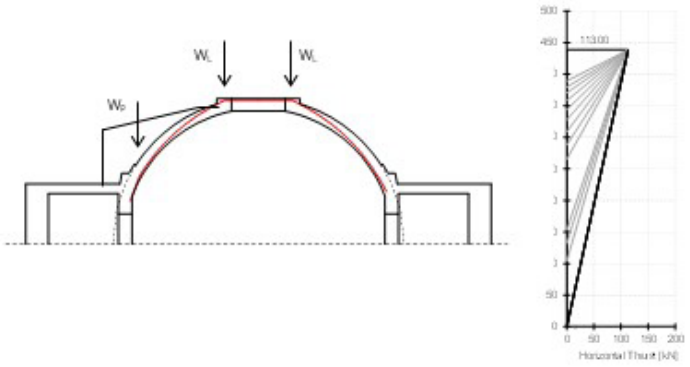

25. TLA analysis of the 30° slice: minimum thrust and funicular polygon.

It is worth noting that once the horizontal thrust has been evaluated, the corresponding internal compressive ring next to the oculus can be defined and a crushing analysis carried out.
Figure 26 depicts the equilibrium of the ring. In particular, the analysis of the stress in the ring shows a mean compressive value of 1.08 MPa, which is much lower than its strength in compression.

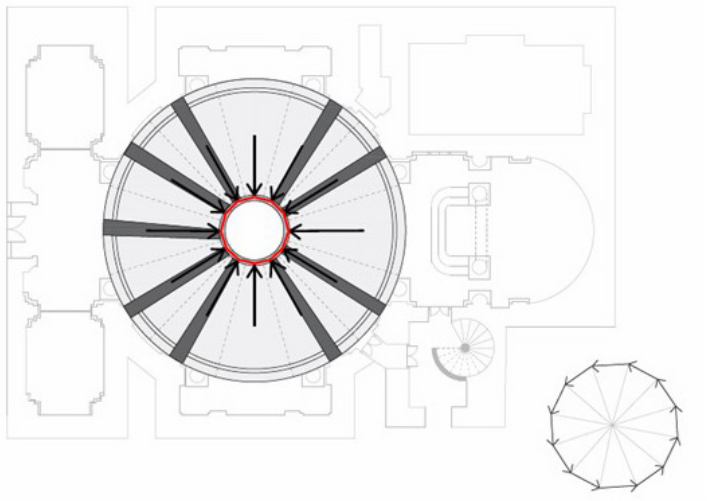

26. Graphic analysis illustrating the ring-like equilibrium of the oculus.

Thrust Network Analysis

The TNA analysis was performed assuming some approximation on both geometry and form diagrams geometric restrictions. Indeed, the TNA results are not representative of a minimum thrust condition as the hope forces are present in all the dome (figure 27). It represents one of the possible internal stress states, and, it shows a global difference of about 20% from the one obtained with the TLA.

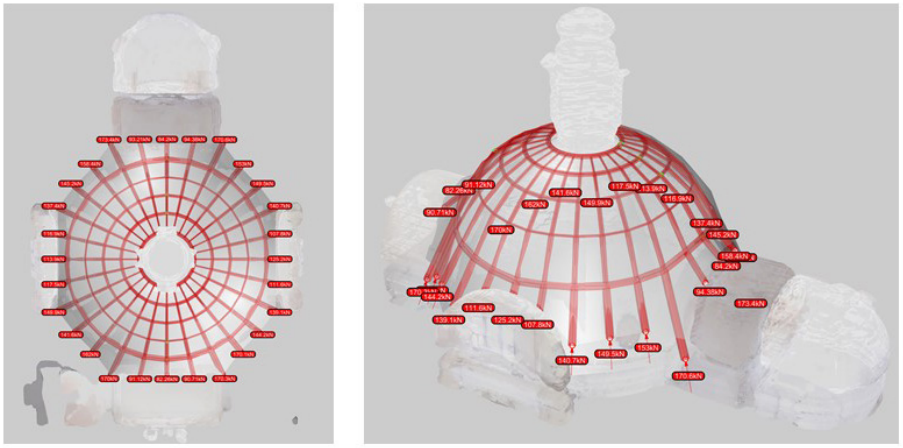

(a) (b)

27. TNA analysis of the dome shows one of the possible admissible internal stress states that engages the 3D structural response.

PRD Analysis

The PRD analysis is performed considering the geometry shown in figure 28, which combines the dome, the lantern and four arches. The basic assumption is that the dome's supports (pink) are subjected to an outward radial displacement. It forces the dome to be in a minimum thrust condition. The green lines depict the dual internal stress state. The reader can note that the internal stress state inside the arches is not planar as noted above.

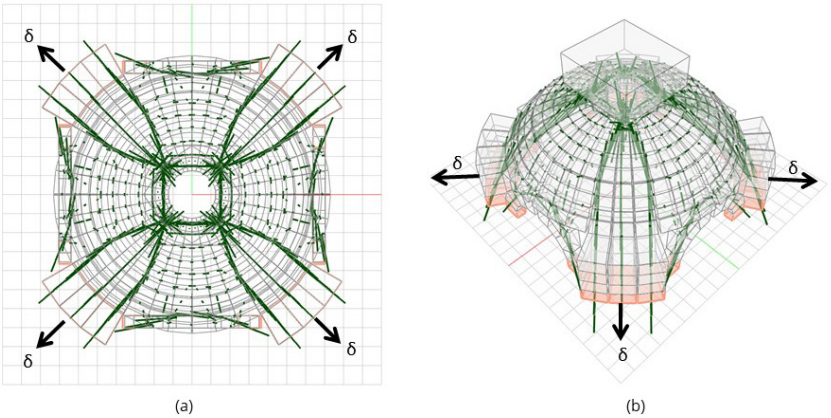

(a) (b)

28. PRD analysis of the dome: plan **(a)** and 3D view **(b)**. The interface forces in green are in equilibrium with the external loads and compatible with an outward radial displacement affecting the supports (pink blocks) of the dome.

CONCLUSIONS

The present paper looks at the stability assessment of Sant'Agostino church in Anagni, a Roman Catholic church located in the town of Anagni, region of Lazio, Italy. On November 3rd 2018, firefighters detected an infiltration from the dome, and the church was closed permanently. Apart from the structural intervention involving only the facade, the church is still closed as doubts about its structural stability. This investigation is the outcome of a study performed by one group of students during the Summer School on Historic Masonry Construction (SSHMC) held in Anagni in September 2021. It provides a quick overview of what would be an ideal assessment strategy that combines historical analysis, visual inspection, geometric processing through e.g. laser scanner, old assessment strategies and new computational approaches.

The structural analysis is performed using the Thrust Line Analysis (TLA), the Thrust Network Analysis (TNA) and Piecewise Rigid Displacement (PRD). It mainly looks at the stability of the dome, which is the most relevant element of the church as its hemispherical shape is intersected by four barrel vaults. The main result is that the structure is safe. The only structural weakness is represented by the facade that was restored in 2019. This is also demonstrated by both the linear and nonlinear kinematic analyses reported in the Appendix. Another point raised by the proposed study is the interpretation of the crack pattern revealed on the dome (figure 29.a-b). The PRD analysis showed that it is perfectly compatible with an outward, radial movement of the dome's supports as illustrated in figure 29.c, which is a typical working condition of a dome.

The peculiar aspect of the present case is represented by a concentration of the meridian fractures mostly on the keystone of the four orthogonal arches. Indeed, the part of the dome in between two continuous arches is fully constrained by huge buttresses that force the cracks to open up only in those areas.

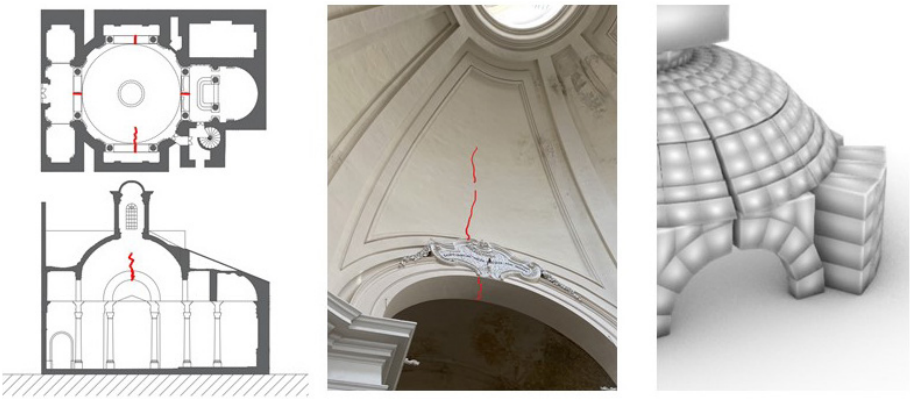

29. The crack pattern found with the PRD analysis **(c)** assuming outward settlements of the supporting structures is perfectly compatible with the one revealed on the dome **(a-b)**.

APPENDIX. Assessment of the church's gable: out of plane mechanism

According to the historical survey, the gable was considered in danger with regard to the horizontal actions as prescribed by the current Italian Code. To assess the stability of the gable with respect to a typical overturning mechanism (figure 30), this Section illustrates the capacity-demand ratio using both a linear and nonlinear kinematic approach. The façade is about 20 m high and 0.80 m thick in its bottom part. The facade thickness reduces to 0.34 m in correspondence with the gable. Originally, the bottom part of the facade was retained by a transversal wall, while the gable was not. Therefore, next paragraph considers a mechanism involving the only gable, as shown in figure 30.

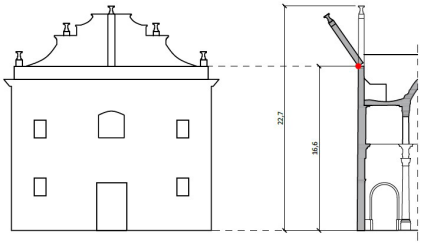

30. Overturning mechanism of the gable.

The acceleration-displacement response spectrum (ADRS) is defined by a nominal life $V_N \geq 100$ years, a class of use equal to 3, a reference period VR and a return period T_R of 150 years and 1424 years, respectively. The seismic hazard is defined by a_g=0.21g, F_0=2.49, T^*_C=0.34s. In compliance with the NTC2018, a preliminary evaluation of the period of the structure returns T=0.52s on assuming 8% as the damping coefficient. Therefore the spectral acceleration $S_e(T,\xi)$ is 0.49 g, while the floor spectrum displacement $S_d(T,\xi)$ is 20.77 cm. The principle of virtual power returns a collapse load multiplier α_0 equal to

$$\alpha_0 = \frac{W\frac{S}{2}}{W h_G} = 8.17\% \tag{1}$$

with S the gable thickness, and h_G the height of the gable's centre of mass.

Linear kinematic approach. In compliance with the current Italian code [18], the capacity in terms of acceleration can be defined as

$$a_C = \frac{\alpha_0 g}{e^* FC} = 0.06g \tag{2}$$

with e^* is the participation mass factor, FC is the confidence factor (assumed equal to 1.35 as an infinite compressive strength is assumed to model the Heyman hypotheses). For the case at hand, the demand is

$$a_{D,SLV} = \frac{S_e(T,\xi)\psi\gamma}{q} = 0.22g \tag{3}$$

with the spectral acceleration $S_e(T,\xi)$ equal to 0.49g, ψ the first mode shape, γ the participation factor and q=2 the behaviour factor. Therefore, the capacity-demand ratio is

$$\varsigma_e = \frac{a_C}{a_{D,SLV}} = 0.28 \tag{4}$$

Nonlinear kinematic approach. In a nonlinear kinematic approach, the capacity-demand ratio is evaluated as a function of the displacements and, according to [18] can be defined as

$$d_{SLV} = 0.4 d_0^* = 6.80\ cm \tag{5}$$

where d_0^* is the displacement of the equivalent single degree of freedom (SDOF) system, which is 17 cm in the present case. The displacement demand $S_d(T,\xi)$ is derived as the intersection between the floor spectrum at z=16.6m level and the secant period of the mechanism (figure 31), defined as follows:

$$T_{SLV} = \sqrt{\frac{d_{SLV}}{a(d_{SLV})}} = 2.31\ s \tag{6}$$

Figure 31 shows the capacity curve of the equivalent SDOF together with the graphical definition of the displacement-based demand. The nonlinear kinematic approach provides a capacity-demand ratio equal to:

$$\varsigma_e = \frac{d_{SLV}}{S_d(T,\xi)} = 0.33 \tag{7}$$

Using both kinematic approaches, though the second one is less conservative, the capacity is less than the demand, either in terms of accelerations or displacements. This also justifies the introduction of an iron tie as the main outcome of the restoration work implemented in 2019.

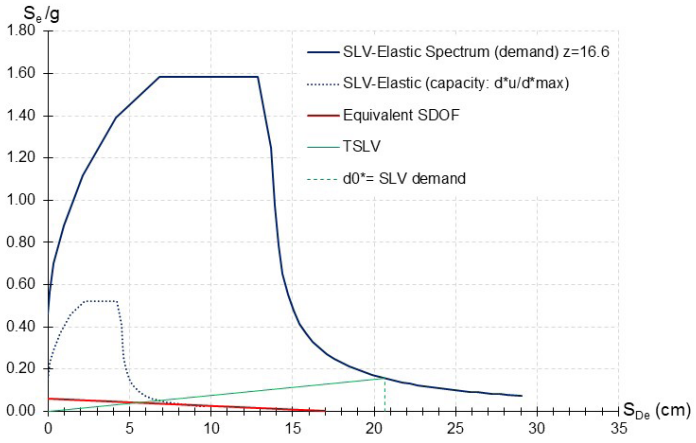

31. Capacity curve of the equivalent SDOF and graphical definition of the displacement-based demand.

Acknowledgements.

The authors would like to acknowledge Prof. Santiago Huerta, Prof. Maurizio Angelillo and Prof. Gianmarco De Felice for their valuable suggestions and help during the Summer School; and Maia Ricardo Avelino for his valued contribution regarding the Thrust Network Analysis of the dome.

REFERENCES

[1] O. Zerlenga, V. Cirillo, C. Cennamo and C. Cusano, "The majolica dome of Santa Maria della Sanità in Naples. Geometric configuration analysis and stability studies | La cúpula de mayólica de Santa Maria della Sanità en Nápoles. Configuración geométrica y estudios de estabilidad," *Informes de la Construccion,* vol. 73, no. 562, p. 1–11, 2021.

[2] C. Cusano, G. Angjeliu, A. Montanino, G. Zuccaro and C. Cennamo, "Considerations about the static response of masonry domes: A comparison between limit analysis and finite element method," *International Journal of Masonry Research and Innovation,* vol. 6, no. 4, p. 502–528, 2021.

[3] P. Block, T. Ciblac and J. A. Ochsendorf, "Real-time limit analysis of vaulted masonry buildings," *Computers & structures,* Vols. 84(29-30), pp. 1841-1852, 2006.

[4] S. Huerta, Arcos bóveda y cúpulas. Geometría y equilibrio en el cálculo tradicional de estructuras de fábrica, Madrid: Instituto Juan de Herrera, 2004.

[5] J. Heyman, "The structural engineer's view of ancient buildings," *Journal of Mechanics of Materials and Structures,* vol. 13, no. 5, pp. 609-615, 2019.

[6] C. Valone, "Giovanni Antonio Dosio: The Roman Years," *The Art Bulletin,* vol. 58, no. 4, pp. 528-541, 1976.

[7] "Scene User Manual," [Online]. Available: https://knowledge.faro.com/Software/FARO_SCENE/SCENE/User_Manual_for_SCENE.

[8] C. Cusano, A. Montanino, C. Cennamo, G. Zuccaro and M. Angelillo, "Geometry and Stability of a Double-shell Dome in Four Building Phases: The Case Study of Santa Maria Alla Sanità in Naples," *International Journal of Architectural Heritage,* pp. 1-2, 2021.

[9] J. Heyman, "The stone skeleton," *International Journal of Solids and Structures,* vol. 2, no. 2, p. 249–279, 1966.

[10] G. Poleni, Memorie Istoriche Della Gran Cvpola Del Tempio Vaticano, E De'Danni Di Essa, E De' Ristoramenti Loro, Divise In Libri Cinqve, Nella Stamperia del seminario..

[11] J. Heyman, The Masonry Arch, Chichester: Ellis Horwood Ltd., 1982.

[12] C. Cusano, A. Montanino, C. Olivieri, V. Paris and C. Cennamo, "Graphical and Analytical Quantitative Comparison in the Domes Assessment: The Case of San Francesco di Paola," *Applied Sciences,* vol. 11, p. 3622, 2021.

[13] R. Maia Avelino, A. Iannuzzo, T. Van Mele and P. Block, "Assessing the safety of vaulted masonry structures using thrust network analysis," *, "Comput. Struct.,* vol. 257, pp. 106-647, 2021.

[14] R. Maia Avelino, A. Iannuzzo, T. Van Mele and P. Block, "Parametric Stability Analysis of Groin Vaults," *Appl. Sci.,* vol. 11, no. 8, 2021.

[15] A. Iannuzzo, T. Van Mele and P. Block, "Piecewise Rigid Displacement (PRD) method: A limit analysis-based approach to detect mechanisms and internal forces through two dual energy criteria," *Mechanics Research Communications,* Vols. 107, 103557, no. doi.org/10.1016/j.mechrescom.2020.103557, 2020.

[16] A. Iannuzzo, F. De Serio, A. Gesualdo, G. Zuccaro, A. Fortunato and M. Angelillo, "Crack patterns identification in masonry structures with a C° displacement energy method," *International Journal of Masonry Research and Innovation,* vol. 3, no. 3, pp. 295-323, 2018.

[17] "Microsoft Excel," Microsoft Corporation/Office 365, 2019. [Online]. Available: https://office.microsoft.com/excel.

[18] CSLP, D.M. 17 gennaio 2018 in materia di "norme tecniche per le costruzioni". Gazzetta Ufficiale n.42 del 20 febbraio 2018, Supplemento ordinario n.8,, Roma: Ministero delle Infrastrutture e dei trasporti, 2018.